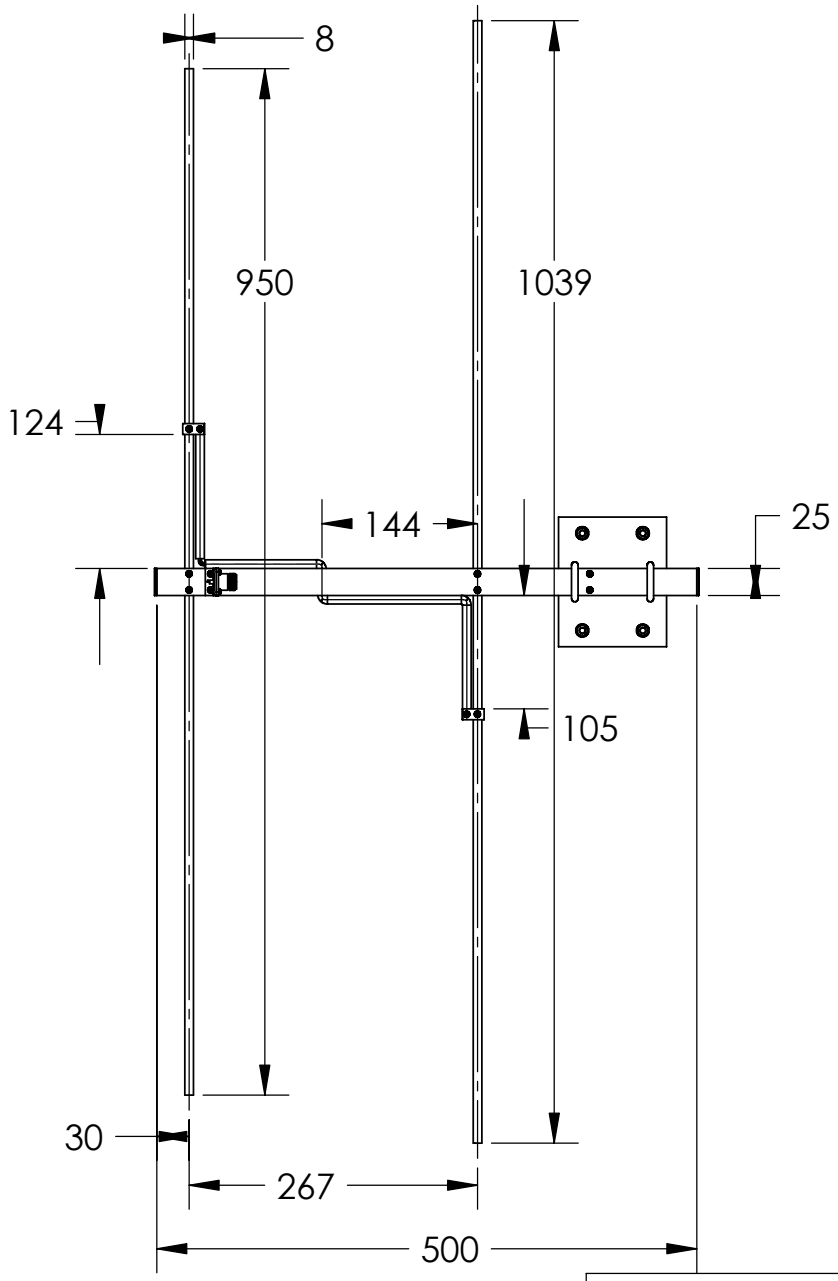

	NAME:	DATE:
DRAWN:	HA7EA	2004.01.28
CHECKED:	HA7EA	2005.04.23
MATERIAL:		
COMMENTS:		

TITLE:

2HB2v1

2 el. HB9CV for 2m

APPLICATION:

SIZE	DWG. NO.	REV
A		

SCALE: 1:7 | WEIGHT: | SHEET 1 OF 1

PROPRIETARY AND CONFIDENTIAL

THE INFORMATION CONTAINED IN THIS DRAWING IS THE SOLE PROPERTY OF DxAnTech.com. ANY REPRODUCTION IN PART OR AS A WHOLE WITHOUT THE WRITTEN PERMISSION OF DxAnTech.com IS PROHIBITED.

5 4 3 2 1